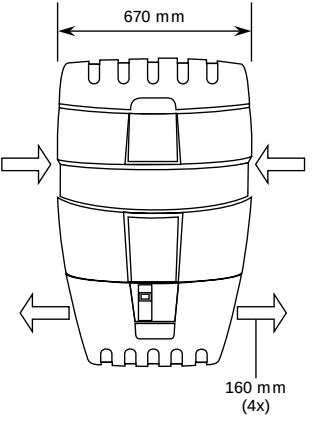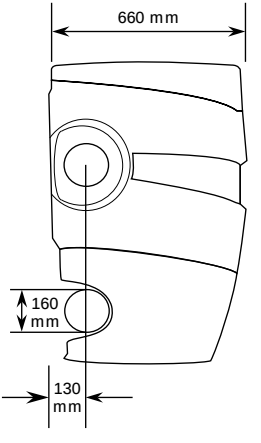Dimensions SFS