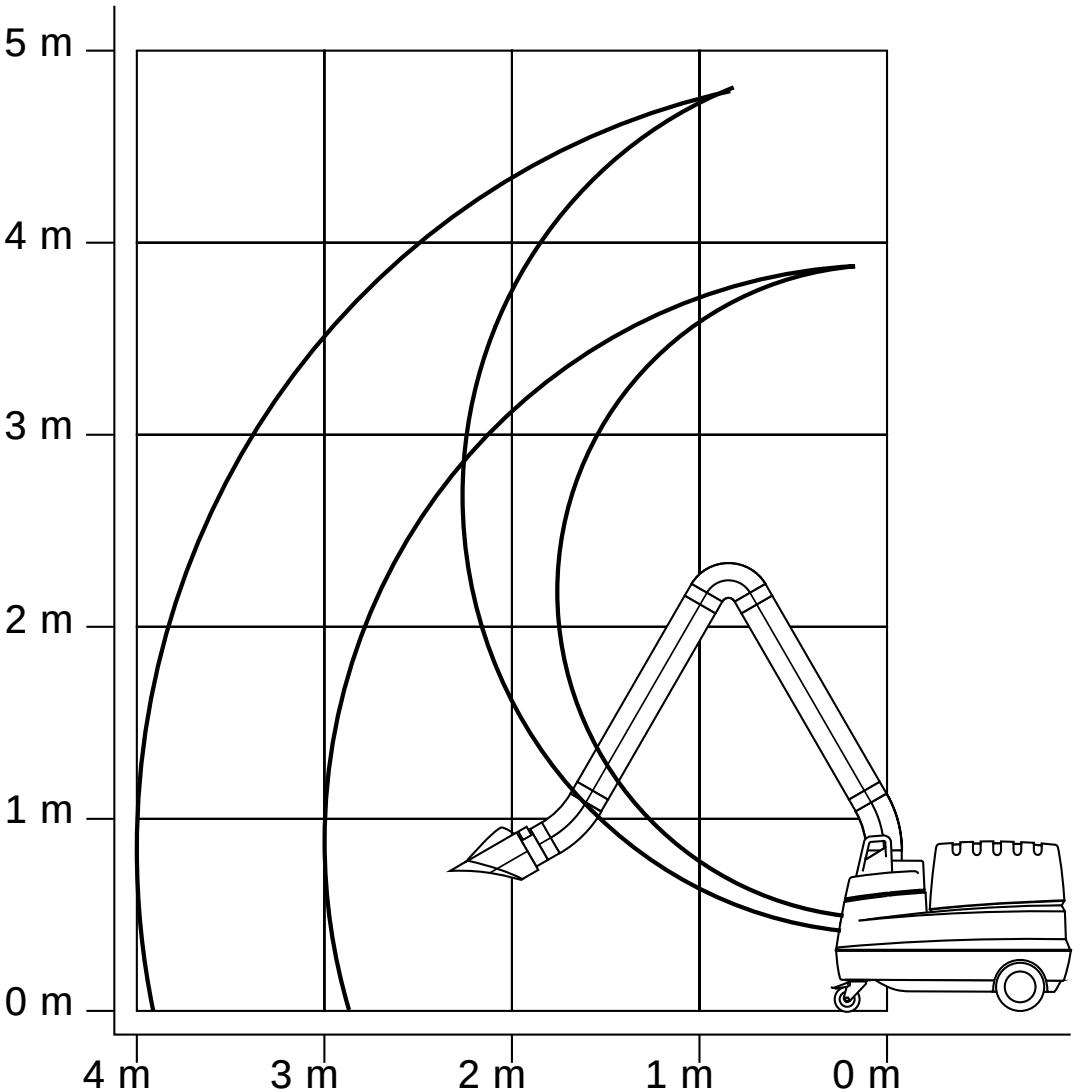Reach of MFD with Flex, UltraFlex 3 and 4